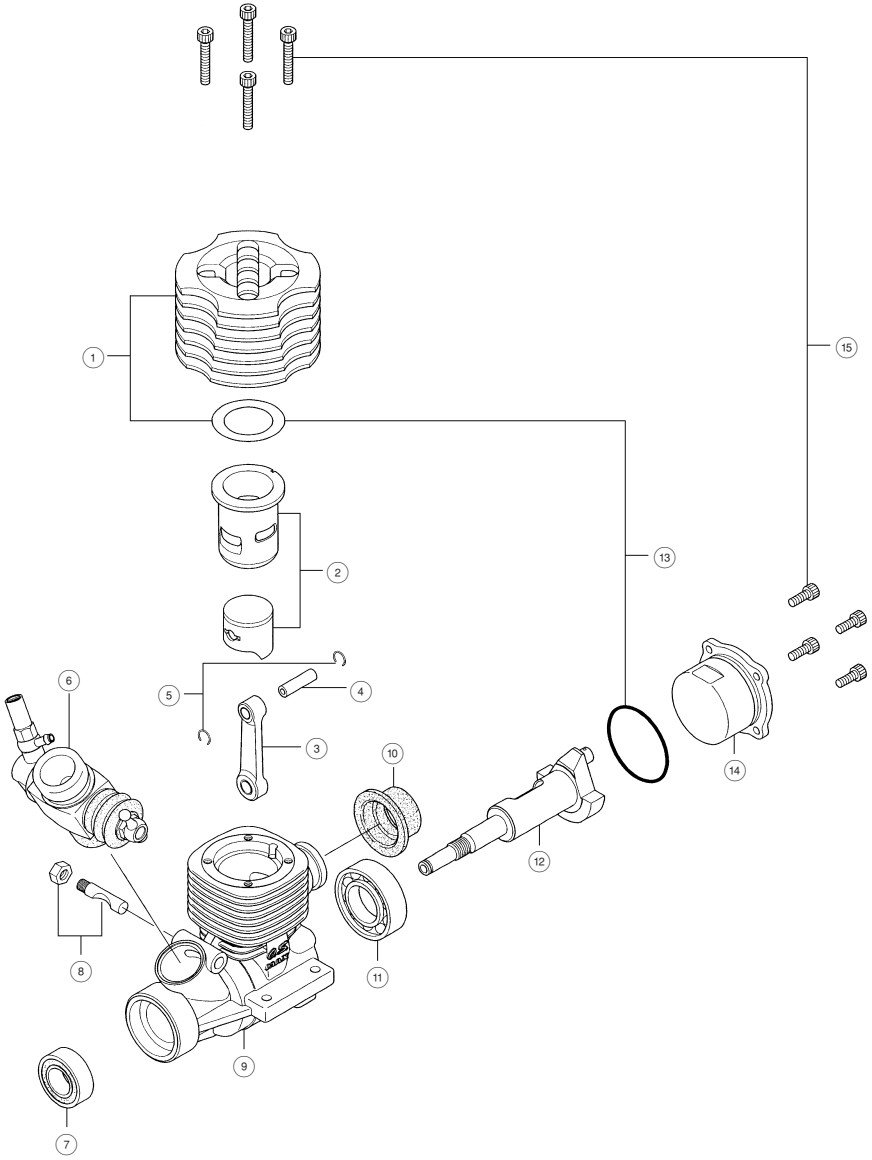

No.	Code No.	Description
1	2 1804 200	Heatsink Head
2	2 1803 010	Cylinder & Piston Assembly
3	2 1805 000	Connecting Rod
4	2 1806 000	Piston Pin
5	2 3817 000	Piston Pin Retainer(2pcs.)
6	2 1881 001	Carburettor Complete 10E
7	4 1614 000	Crankshaft Ball Bearing(F)
8	2 5381 701	Carburettor Retainer Assembly
9	2 1801 000	Crankcase
10	2 1826 100	Exhaust Seal Ring(3pcs.)
11	2 3430 000	Crankshaft Ball Bearing(R)
12	2 1802 000	Crankshaft
13	2 1814 000	Gasket Set
14	2 1807 000	Cover Plate
15	2 1813 000	Screw Set
	7 1605 200	Glow Plug R5
	7 2403 300	Super Air Cleaner 103(W/two filter elements)
	7 2403 310	103 Cleaner Body
	7 2403 320	103 Filter Element(4pcs.)
✻	7 2103 010	T-1010 Tuned Silencer
✻	7 2103 210	Exhaust Header Pipe
✻	7 2103 220	15RX Exhaust Header Pipe Spring (2pcs.)
✻	7 2103 310	Super Joint Tubu 15
✻	7 3300 305	Dust cap set □4 (5pcs.)
✻	7 3300 712	Dust cap set □7 (3pcs.)
✻	7 3301 012	Dust cap set □12 (3pcs.)
✻	7 1530 200	Crankshuft Clamp 1521
✻	7 1521 000	Long Scoket Wrench

✻ Optional extra parts

MAX-15RX

(11500)