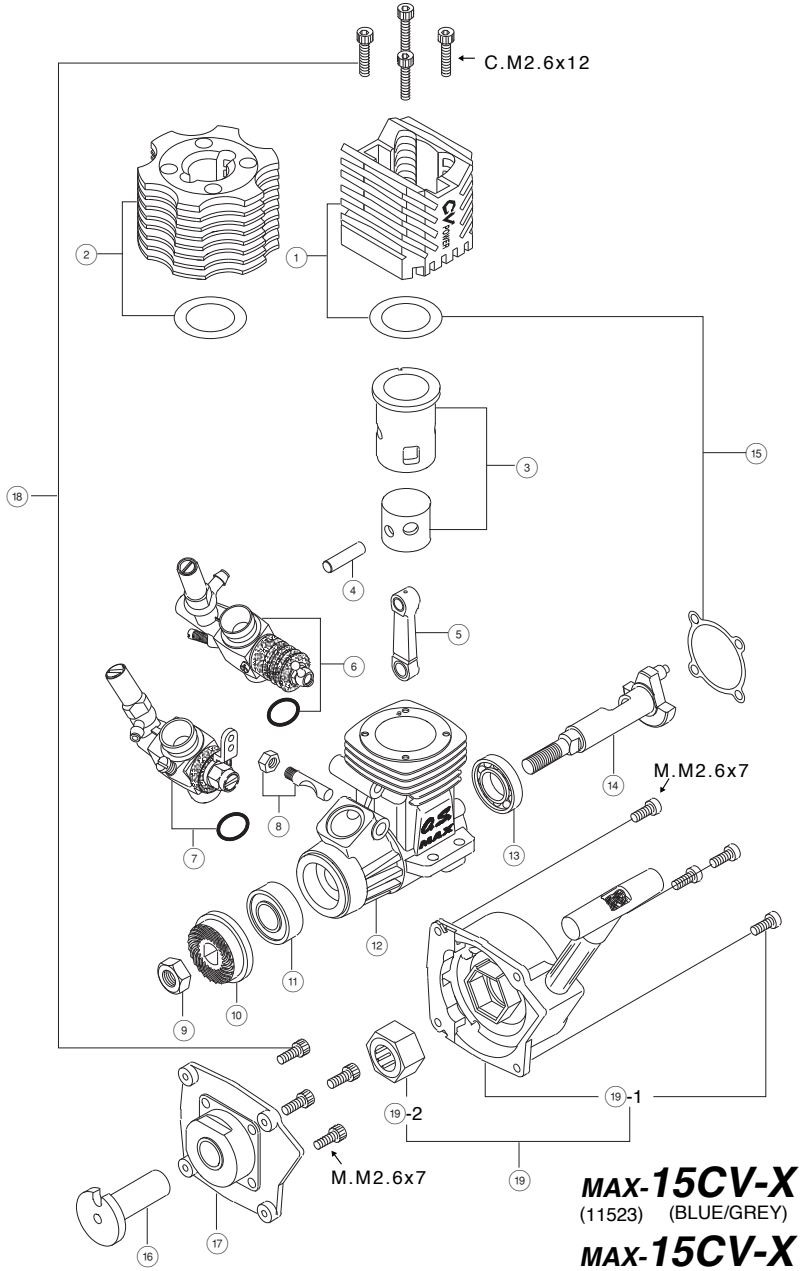

MAX-15CV-X
(11523) (BLUE/GREY)

MAX-15CV-X Hyper
(11529) W/10A Automatic Carburettor

MAX-15CV-X
(11520) (BLUE/BLUE)

✻Type of screw
C...Cap Screw B...Binding Head Screw M...Oval Fillister-head Screw
F...Flat Head Screw N...Round Head Screw S...Set Screw

No.	Code No.	Description
1	2 1504 000	Heatsink Head(BLUE)
2	2 1504 200	15CV Machine Head(BLUE)
3	2 1503 000	Cylinder & Piston Assembly
4	2 1706 000	Piston Pin
5	2 1205 040	Connecting Rod
6	2 1285 002	Carburettor Complete(10A)
7	2 1481 010	Carburettor Complete(10E-R)
8	2 1481 700	Carburettor Retainer
9	2 0810 007	Propeller Nut
10	2 1408 000	Drive Hub
11	2 2631 019	Crankshaft Ball Bearing(Front)
12	2 1501 010	Crankcase(GREY)
13	2 1230 000	Crankshaft Ball Bearing(Rear)
14	2 1202 000	Crankshaft
15	2 1514 010	Gasket Set
16	2 1421 200	Starting Shaft
17	2 1421 100	Rear Adaptor
18	2 1313 030	Screw Set
19	7 3003 000	No.5 Recoil Starter Assembly
19-1	7 3003 100	No.5 Recoil Starter Body
19-2	7 3003 200	No.5 One-way Clutch
	7 2404 000	Engine Mount Spacer
	7 1608 001	Glow Plug No.8
	7 2403 202	————————
	7 2403 212	————————
	7 2403 120	————————
	7 2403 200	Super Air Cleaner 102 (3 filter elements)
	7 2403 210	102 Cleaner Body
	7 2403 120	101,102 Filter Element (6pcs.)
✻	2 1285 002	Carburettor Complete 10A
✻	7 1605 100	Glow Plug A5
✻	7 2103 020	T-1020 Tuned Silencer
✻	7 2103 110	Exhaust Header Pipe (For KYOSHO Super Ten)
✻	7 2103 140	Exhaust Header Pipe (For KYOSHO Spider & HPI Nitro)
✻	7 2103 120	Exhaust Header Pipe (For TAMIYA TGX)
✻	7 2103 130	Exhaust Header Pipe (For TAMIYA TG10)
✻	2 1504 100	15CV Machine Head (BLACK)
✻	2 1504 200	15CV Machine Head (GOLD)
✻	7 3300 305	Dust Cap Set □4 (For Carburettor Nipple)
✻	7 3300 712	Dust Cap Set □7 (For T-1020)
✻	7 3300 012	Dust Cap Set □10 (For 10A,10E-R Carburettor)
✻	7 1530 200	Crankshaft Clamp 1521
✻	7 1521 000	Long Socket Wrench

✻ Optional extra parts