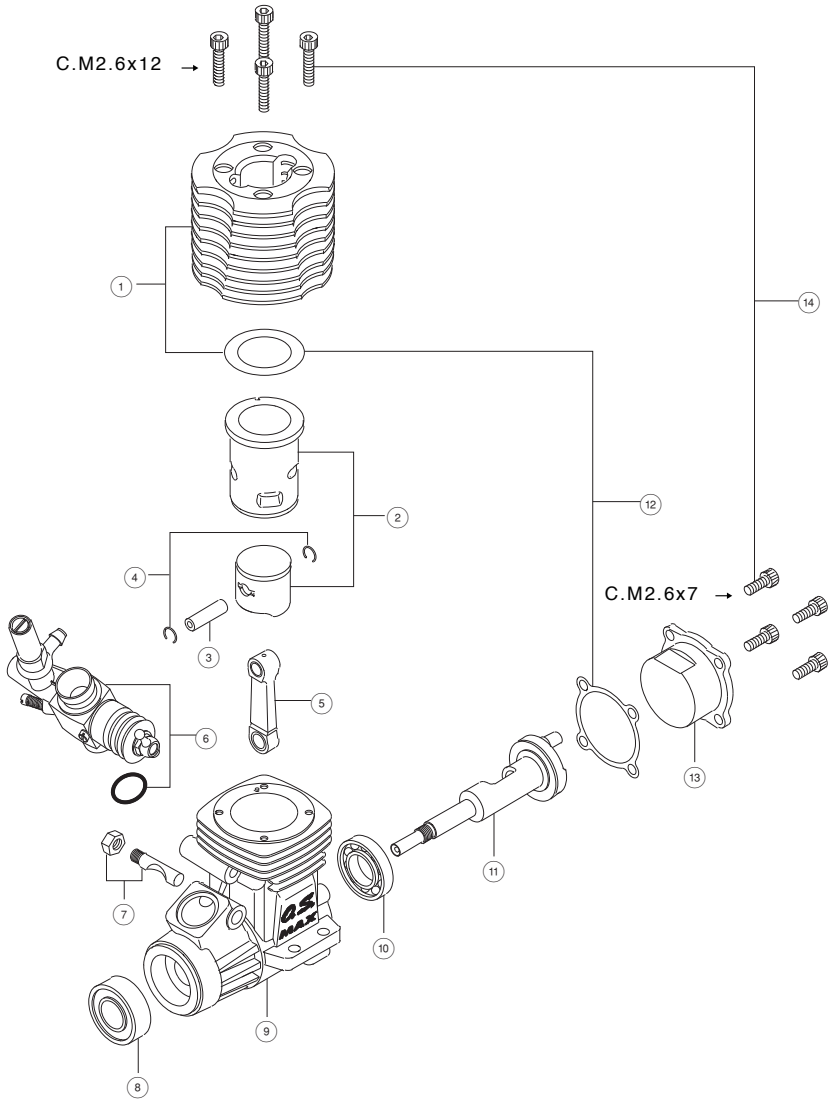

No.	Code No.	Description
1	2 1254 000	Heatsink Head
2	2 1253 000	Cylinder & Piston Assembly
3	2 1256 000	Piston Pin
4	2 3817 000	Piston Pin Retainer(2pcs.)
5	2 1255 000	Connecting Rod
6	2 1285 002	Carburettor Complete(10A)
7	2 1481 700	Carburettor Retainer
8	2 2631 020	Crankshaft Ball Bearing(Front)
9	2 1251 000	Crankcase
10	2 1230 020	Crankshaft Ball Bearing(Rear)
11	2 1252 020	Crankshaft
12	2 1214 000	Gasket Set
13	2 1257 000	Cover Plate
14	2 1213 000	Screw Set
	7 1608 001	Glow Plug No.8
	7 2403 202	———————
	7 2403 212	———————
	7 2403 120	———————
	7 2403 200	Super Air Cleaner 102 (3 filter elements)
	7 2403 210	102 Cleaner Body
	7 2403 120	101,102 Filter Element (6pcs.)
✻	2 1285 002	Carburettor Complete 10A
✻	7 1605 100	Glow Plug A5
✻	7 2103 020	T-1020 Tuned Silencer
✻	7 2103 110	Exhaust Header Pipe (For KYOSHO Super Ten)
✻	7 2103 140	Exhaust Header Pipe (For KYOSHO Spider & HPI Nitro)
✻	7 2103 120	Exhaust Header Pipe (For TAMIYA TGX)
✻	7 2103 130	Exhaust Header Pipe (For TAMIYA TG10)
✻	7 2103 310	Super Joint Tube 15
✻	7 3300 305	Dust Cap Set ø4(For Carburettor Nipple)
✻	7 3300 712	Dust Cap Set ø7(For T-1020)
✻	7 3300 012	Dust Cap Set ø10(For 10A,10E-R Carburettor)
✻	7 1530 100	Crankshaft Clamp 1012
✻	7 1521 000	Long Socket Wrench

✻ Optional extra parts

MAX-12CV-R(P)

(11293)

W/10A Automatic Carburettor

✻ Type of screw

C...Cap Screw B...Binding Head Screw M...Oval Fillister-head Screw F...Flat Head Screw
N...Round Head Screw S...Set Screw